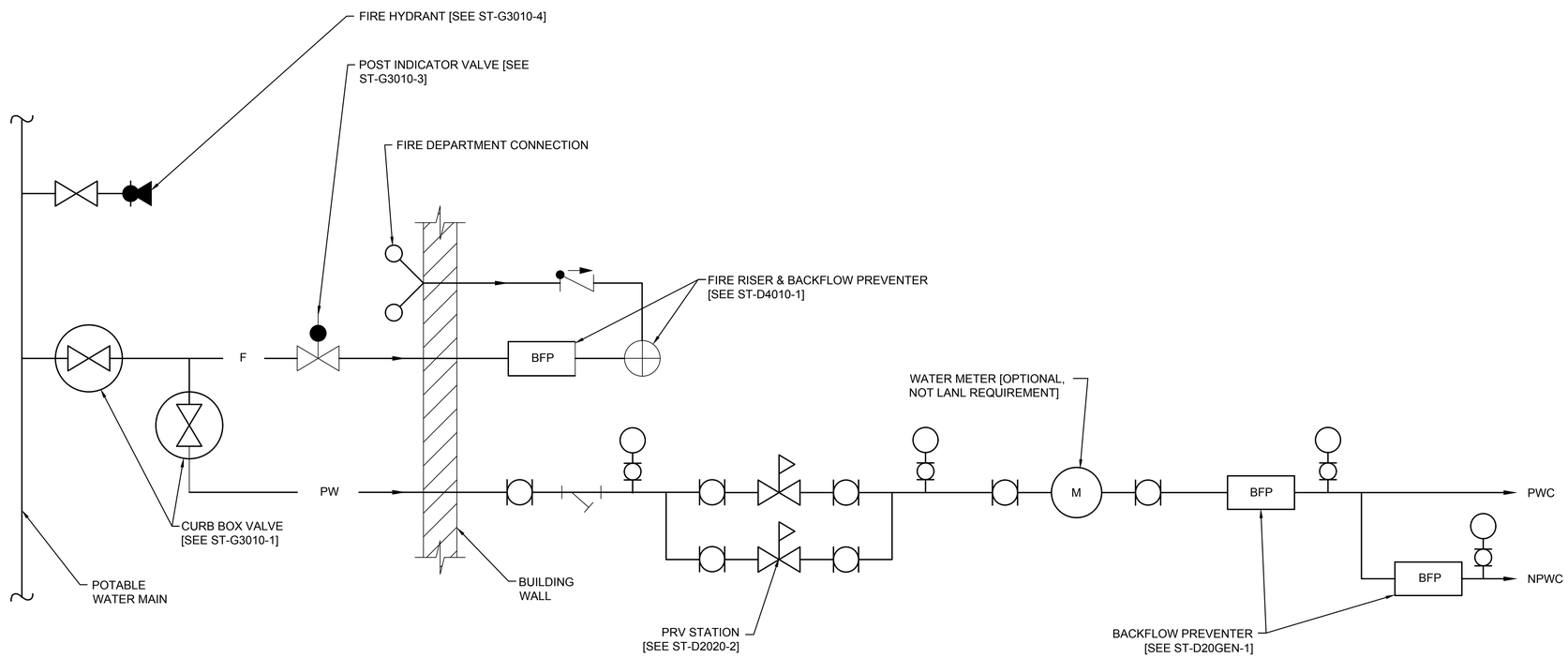

DRAWING DEVELOPED FOR ML-3/ ML-4 PROJECTS. FOR ML-1/ ML-2, ADDITIONAL REQUIREMENTS AND QA REVIEWS ARE REQUIRED. (REMOVE THIS NOTE WHEN INSERTED INTO A DRAWING PACKAGE).

SITE/BUILDING WATER COMPONENT DETAIL

SCALE: NONE

NOTES FOR DESIGNER: (DO NOT INCLUDE ON CONSTRUCTION DRAWINGS)

1. WHEN EDITING DETAIL TO SUIT PROJECT, ADD JOB SPECIFIC REQUIREMENTS AND DELETE ONLY THOSE PORTIONS THAT DO NOT APPLY. TO SEEK A VARIANCE FROM APPLICABLE REQUIREMENTS, CONTACT THE ESM MECHANICAL POC.
2. REFER TO THE FOLLOWING LANL STANDARDS FOR ADDITIONAL REQUIREMENTS:
   A. ENGINEERING MANUAL'S FIRE PROTECTION, CIVIL, AND MECHANICAL CHAPTERS.

00% REVIEW
NOT FOR CONSTRUCTION

NO	DATE	CLASS REV	DC	DESCRIPTION	DWN	DSGN	CHKD	SUB	APP
2	06-23-2017	UNCLASS	TO	ADMIN. CHANGES TO CAD STD. REV#5 FORMAT	JB	AJ	ML	ML	TO
1	08-14-2003	U	LB	EDITORIAL CHANGES & DWG. NO. WAS ST6005	RP	AY	RR	GG	TO

ENGINEERING STANDARDS

MECHANICAL

SITE/BUILDING WATER COMPONENT DETAIL

TA- XX BLDG- XX

DRAWN	R.PEARSON
DESIGN	A.YAEGER
CHECKED	G.GREWAL
DATE	09-05-02

SUBMITTED
DISCIPLINE POC: GURINDER GREWAL

APPROVED FOR RELEASE
STANDARDS MANAGER: TOBIN ORUCH

Los Alamos NATIONAL LABORATORY
PO Box 1663
Los Alamos, New Mexico 87545

SHEET 1 OF 1

D.C.: U REVIEWER: LARRY BAYS DATE: 09-05-02

PROJECT ID: CHAPTER 6
DRAWING NO: ST-D2020-1
REV: 2